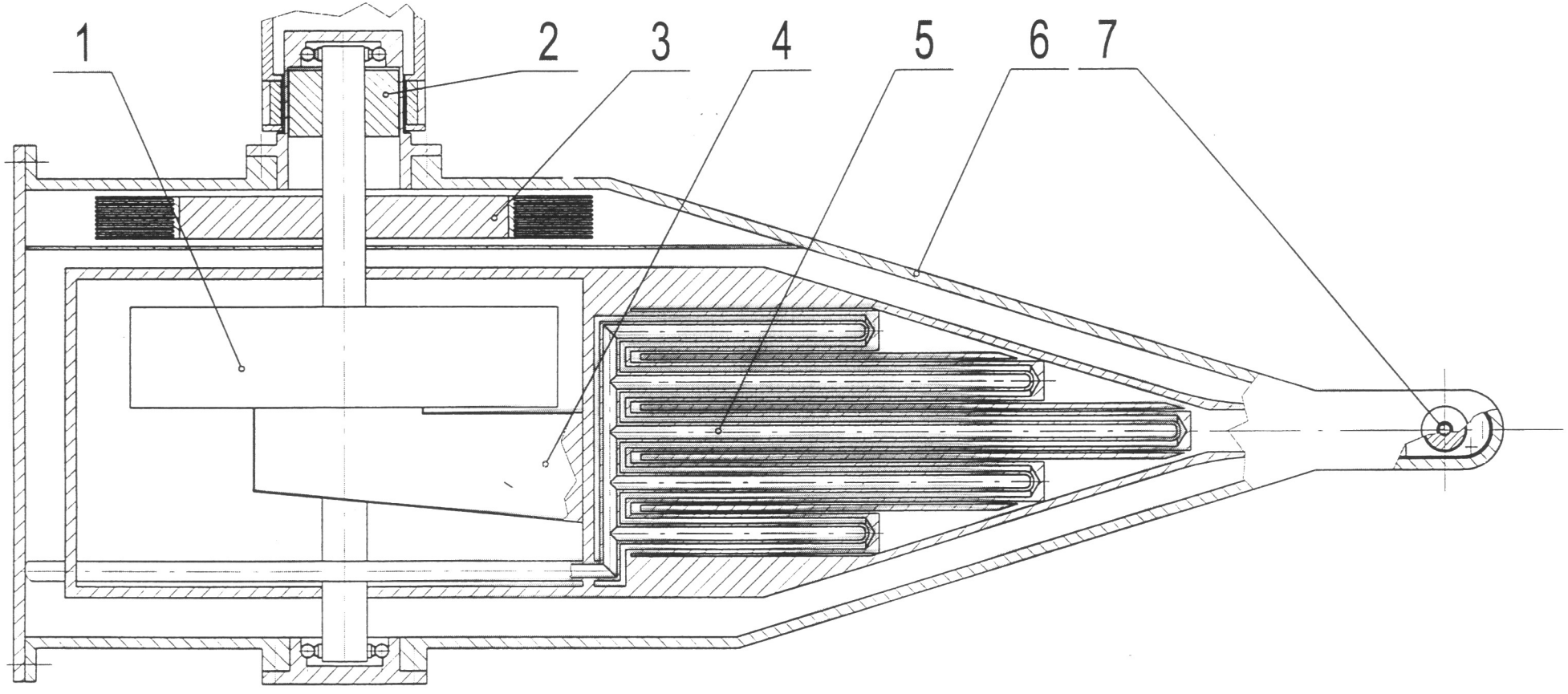

Cylindrical jet target

1-wheel of liquid metal pump; 2-driving-magnetic muff; 3-gallium cooling wheel; 4-drain trough of pump; 6-vacuum chamber; 7-jet target.

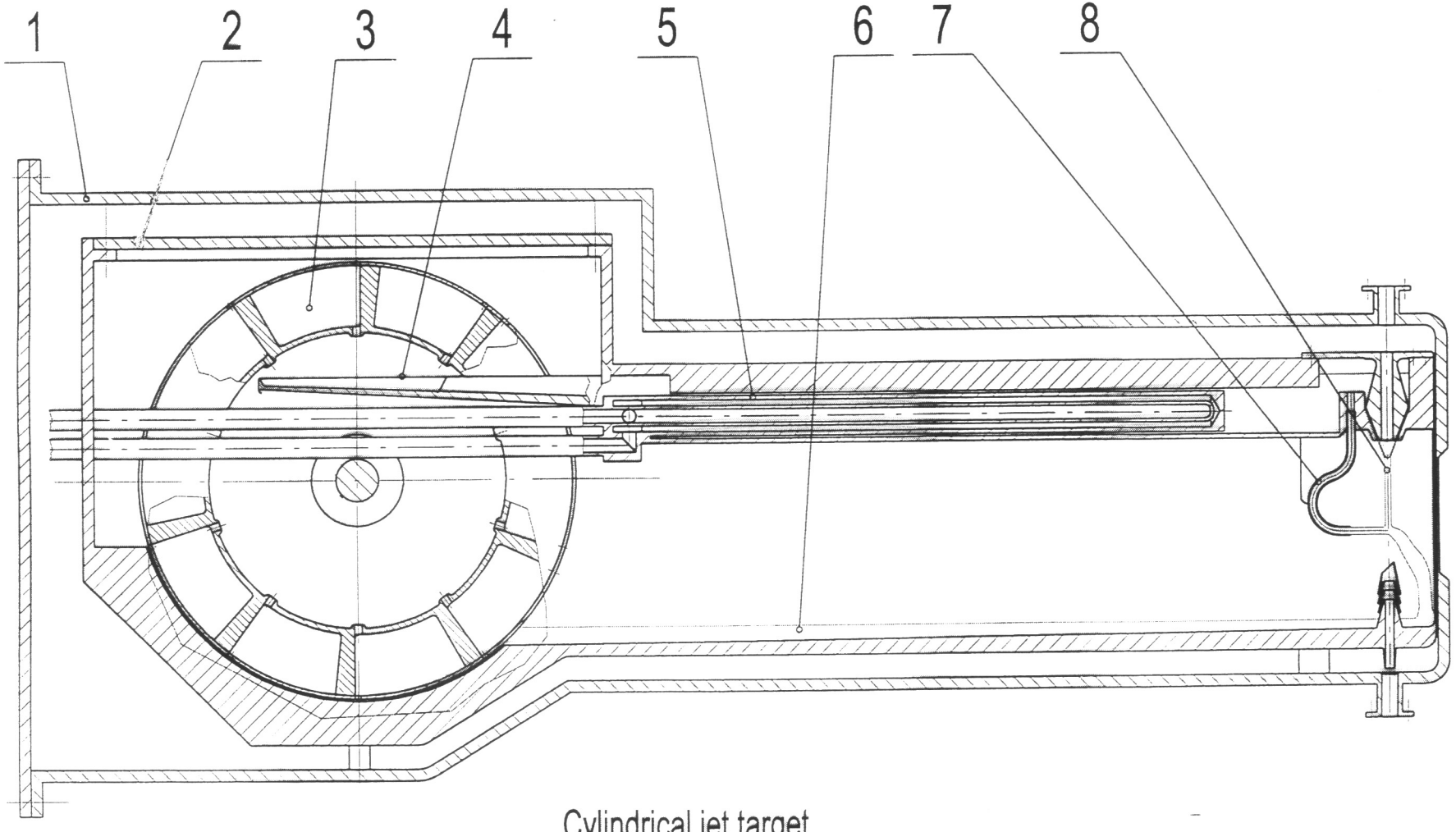

Cylindrical jet target

1-vacuum chamber; 2-hot vacuum chamber; 3-wheel of liquid metal pump; 4-drain trough of pump; 5-heat exchanger; 6-liquid metal; 7-tube of terminating jet; 8-jet target.

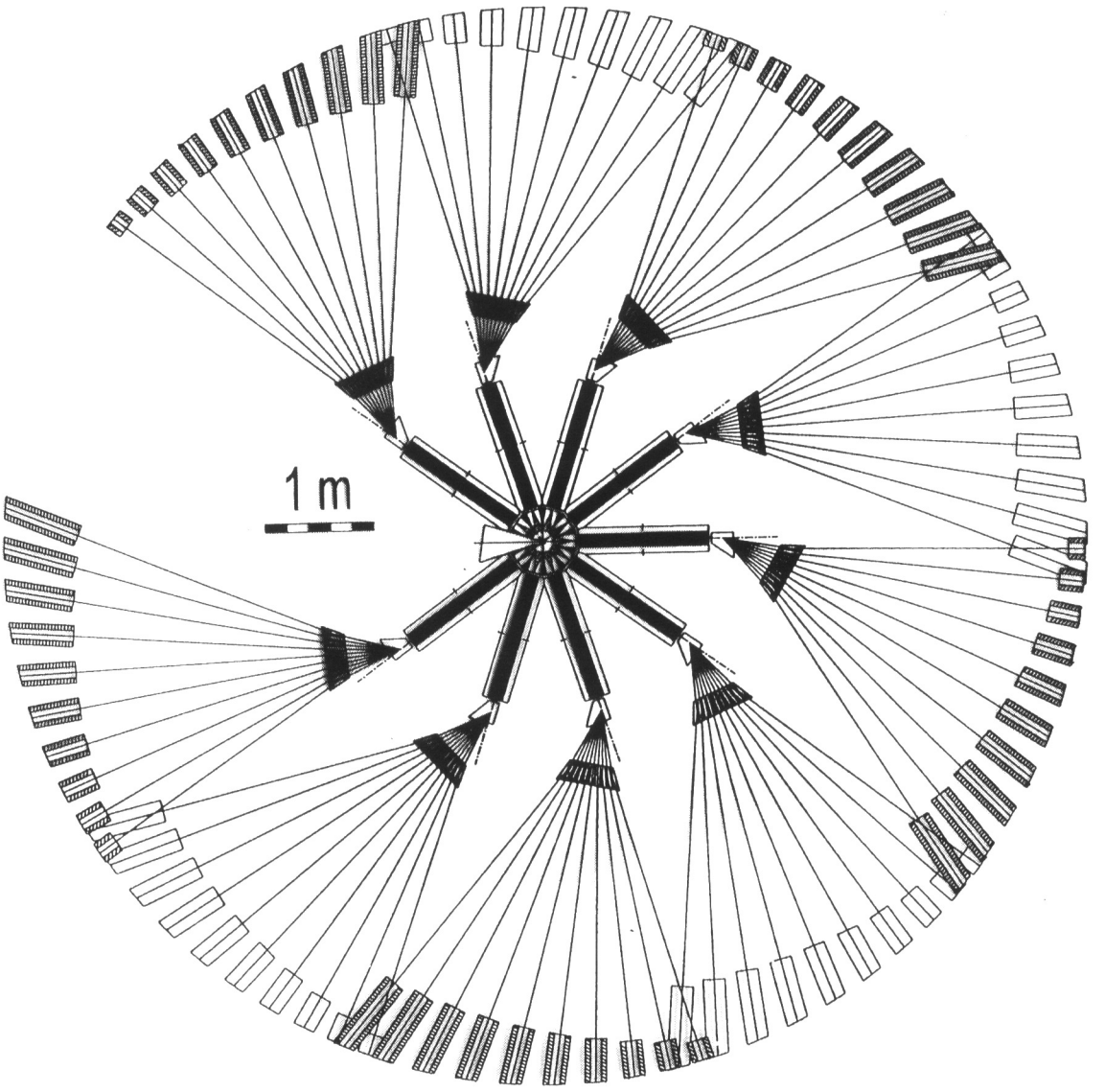

Multichannel pion collection system for polarized muon beams production - top view.

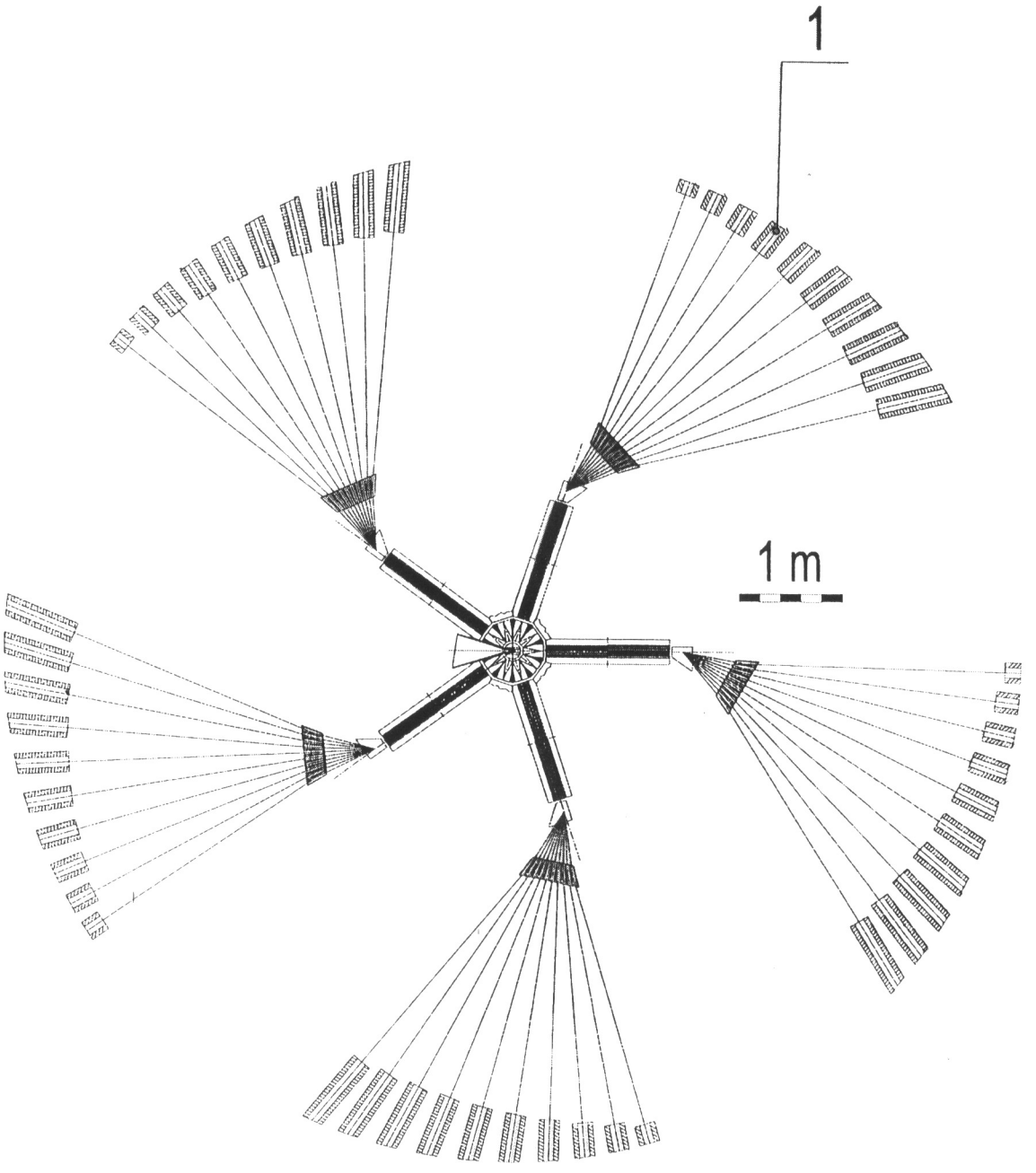

Multichannel pion collection system for polarized muon beams production - top view.

1-pions decay channels.

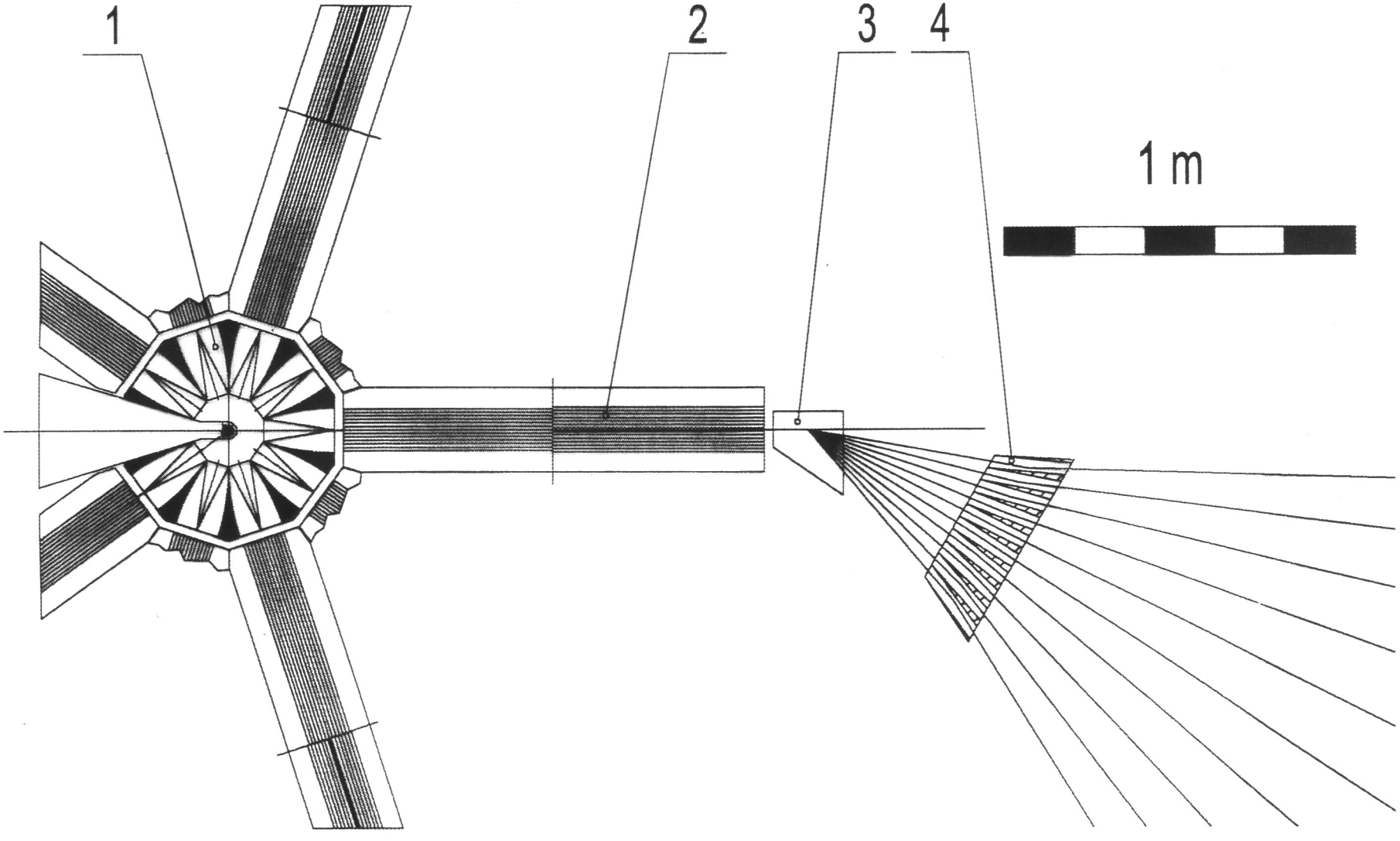

Multichannel pion collection system for polarized muon beams production - top view.

1-horizontal one-dimensional wedge type collection lenses; 2-vertical one-dimensional wedge type collection lenses; 3-separating dipole magnets; 4-septum magnets.

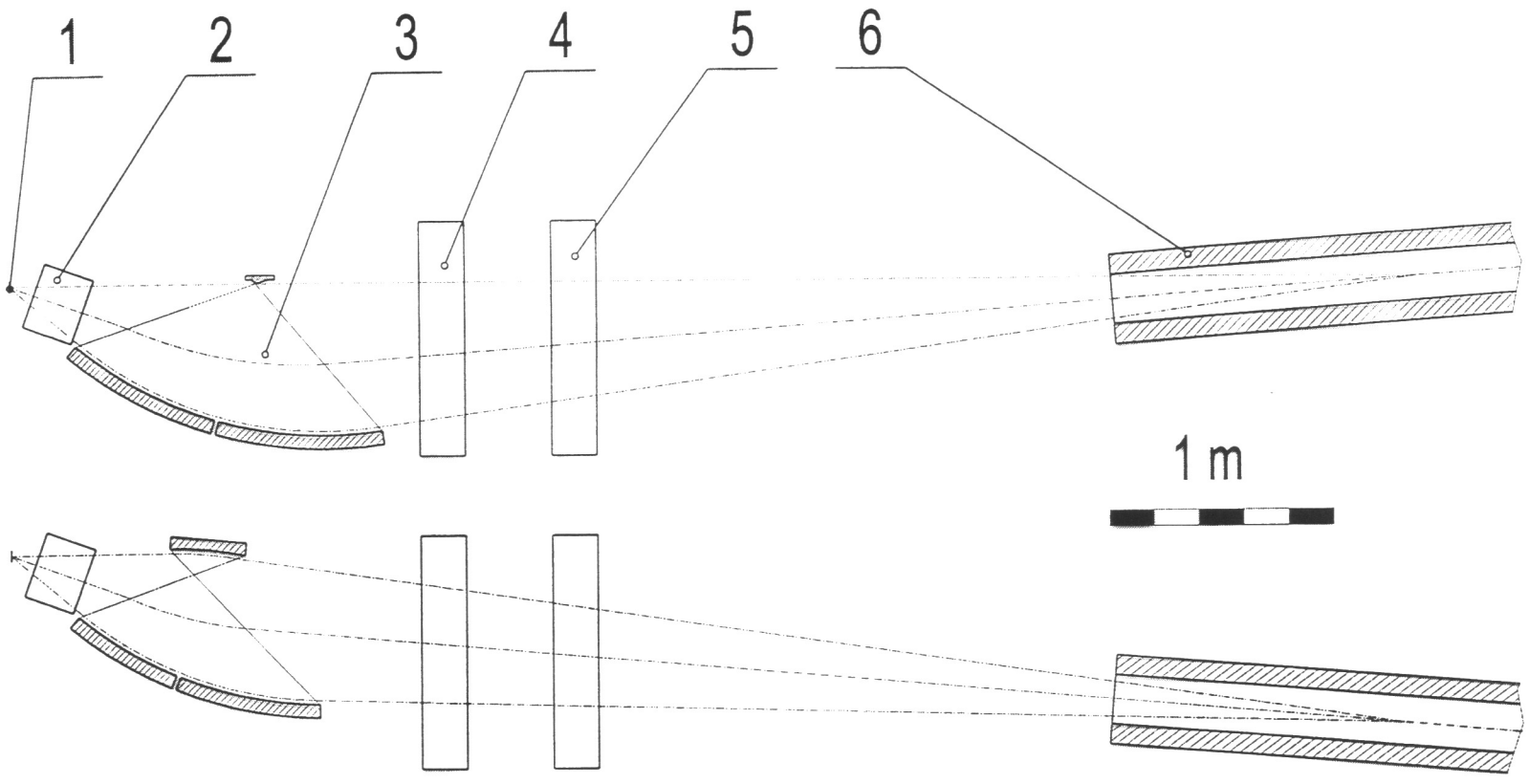

Multichannel pion collection system for polarized muon beams production - side view.

1-target; 2-horizontal one-dimensional wedge-type collection lenses; 3-vertical one-dimensional wedge-type collection lenses; 4-separating dipole magnets; 5-septum magnets; 6-pions decay channels.

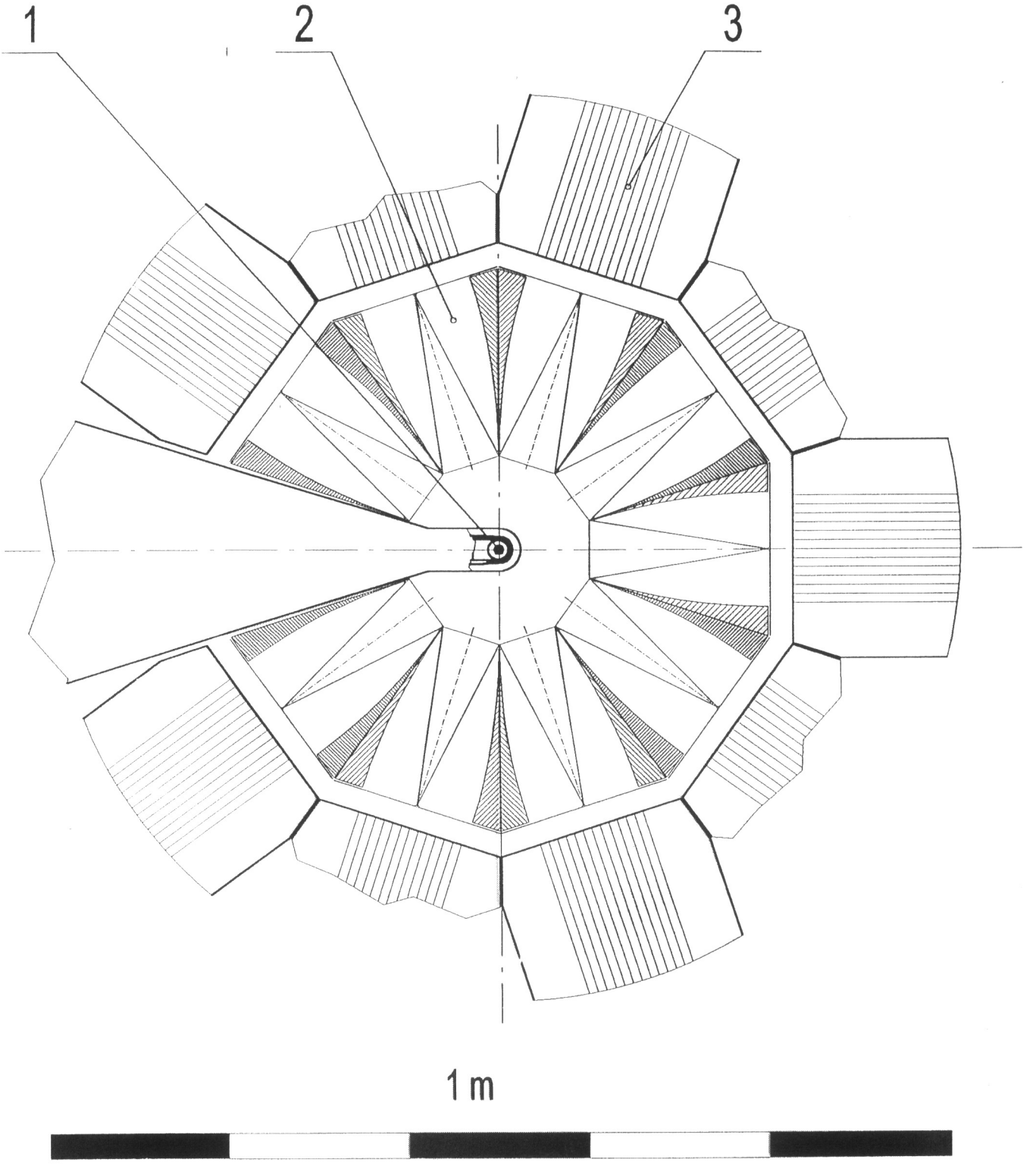

Multichannel pion collection system for polarized muon production - top view.

1-target; 2-horizontal one-dimensional wedge-type collection lenses; 3-vertical one-dimensional wedge-type collection lenses.

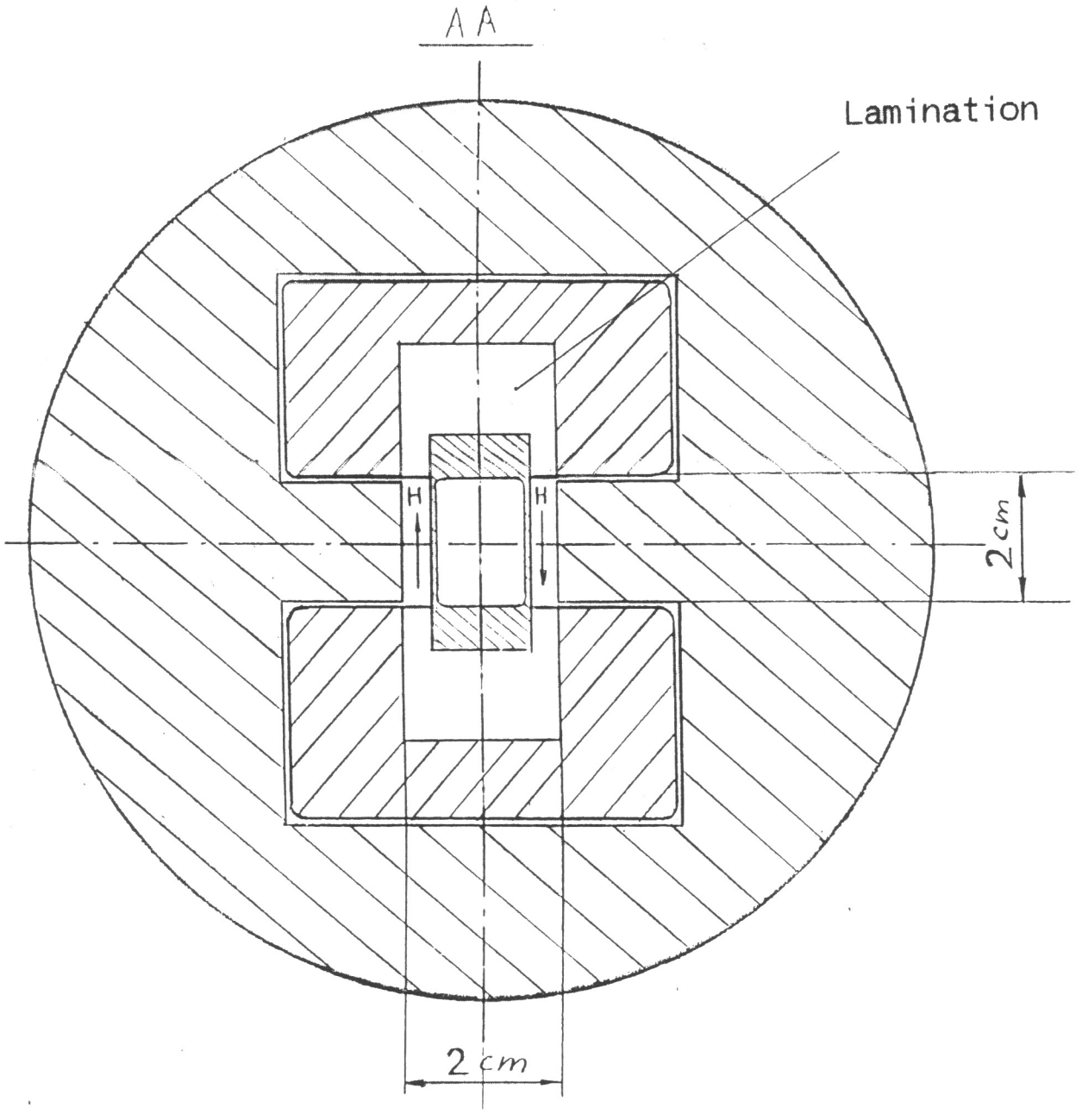

Cross-section of the wedge lens

ONE-DIMENSIONAL FOCUSING WEDGE LENS FOR SEPARATION OF PIONS WITH DIFFERENT ENERGY

$\alpha_{col} = \pm 3 \cdot 10^{-2}$ P_{max}=300 MeV/c H_{max}=4.3 kOe

$\alpha_b = \pm 10^{-1}$ P_{min}=100 MeV/c H_{min}=1.5 kOe

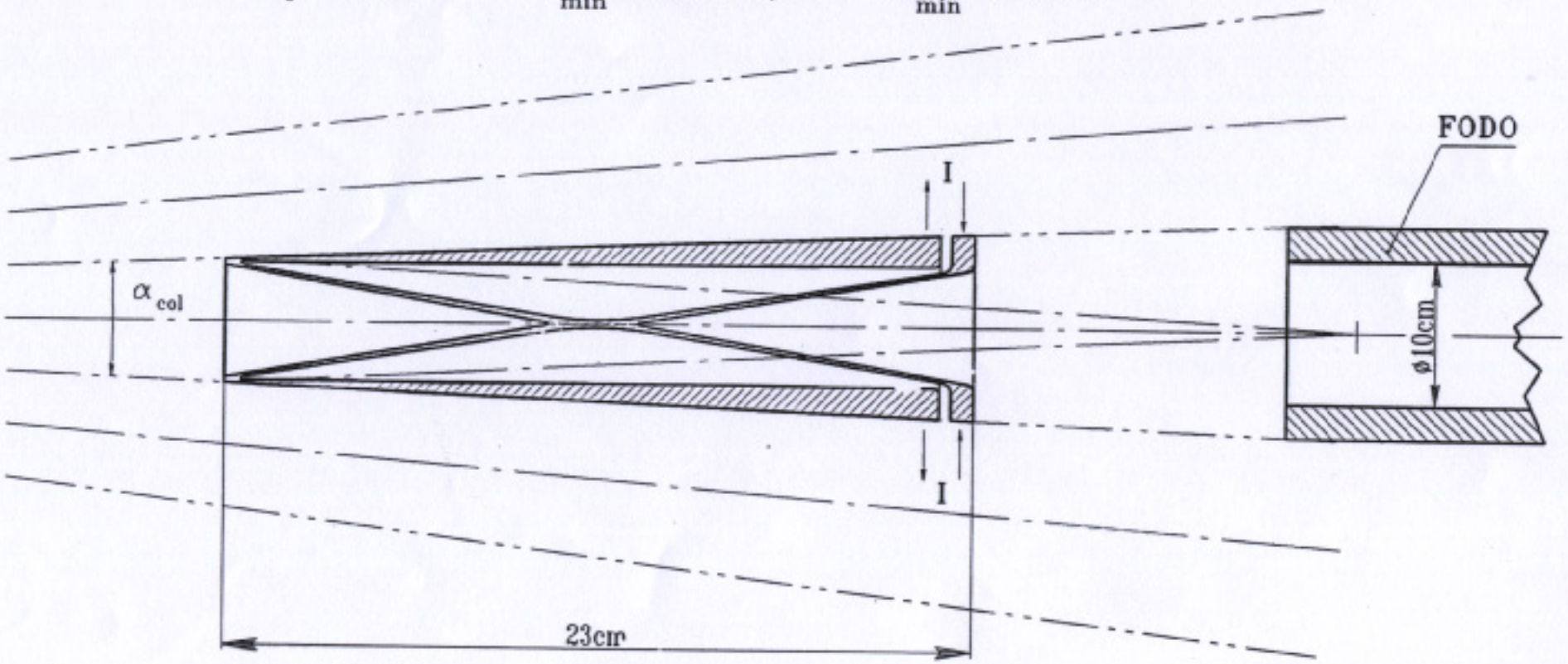

ONE DIMENSION
WEDGE LENS

H=10 KOe I=32 KA

E_p=200 MeV F=20 cm

$\Delta = 0.5\,mm$ $\bar{\theta}_{rms} = 6\,mrad$

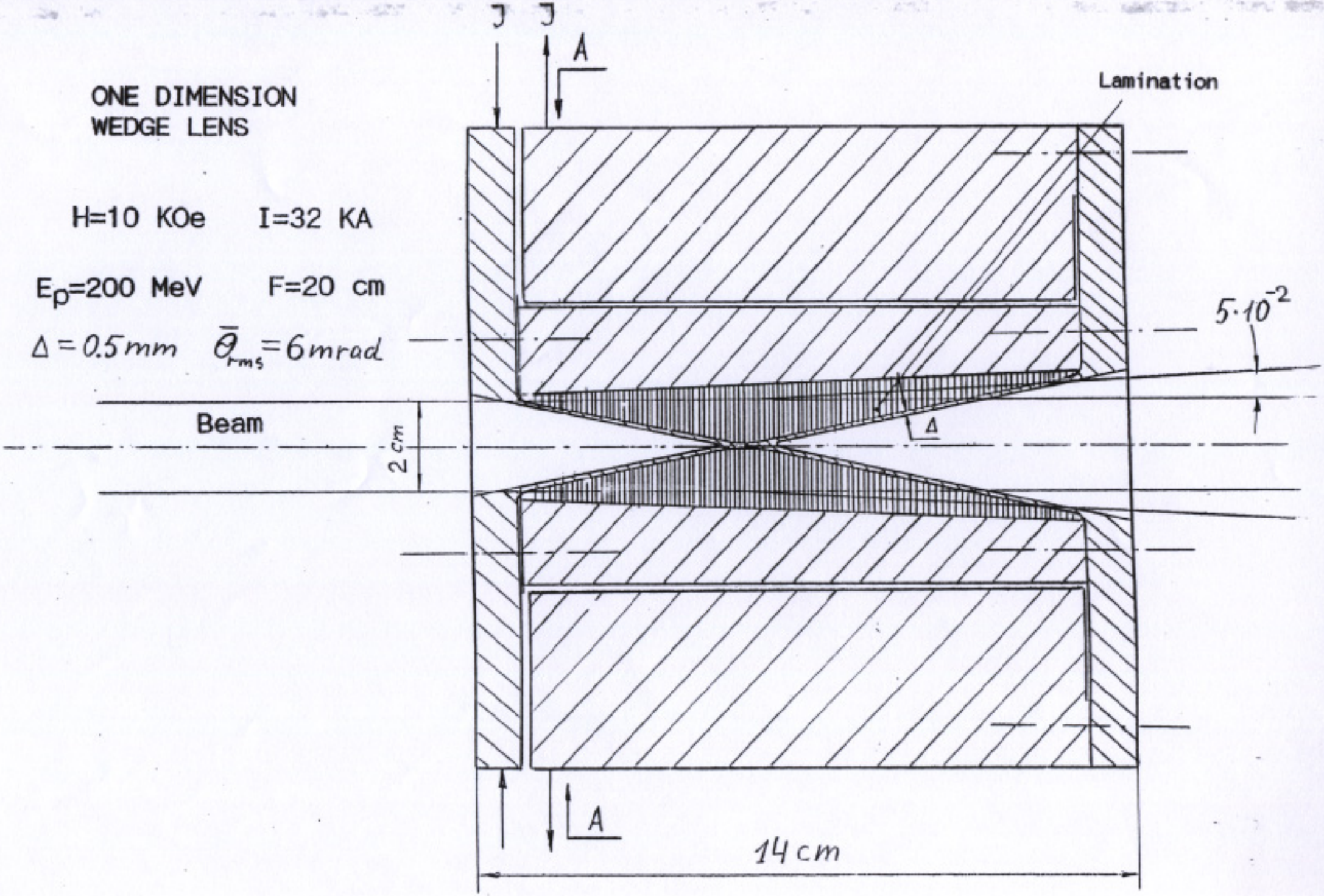

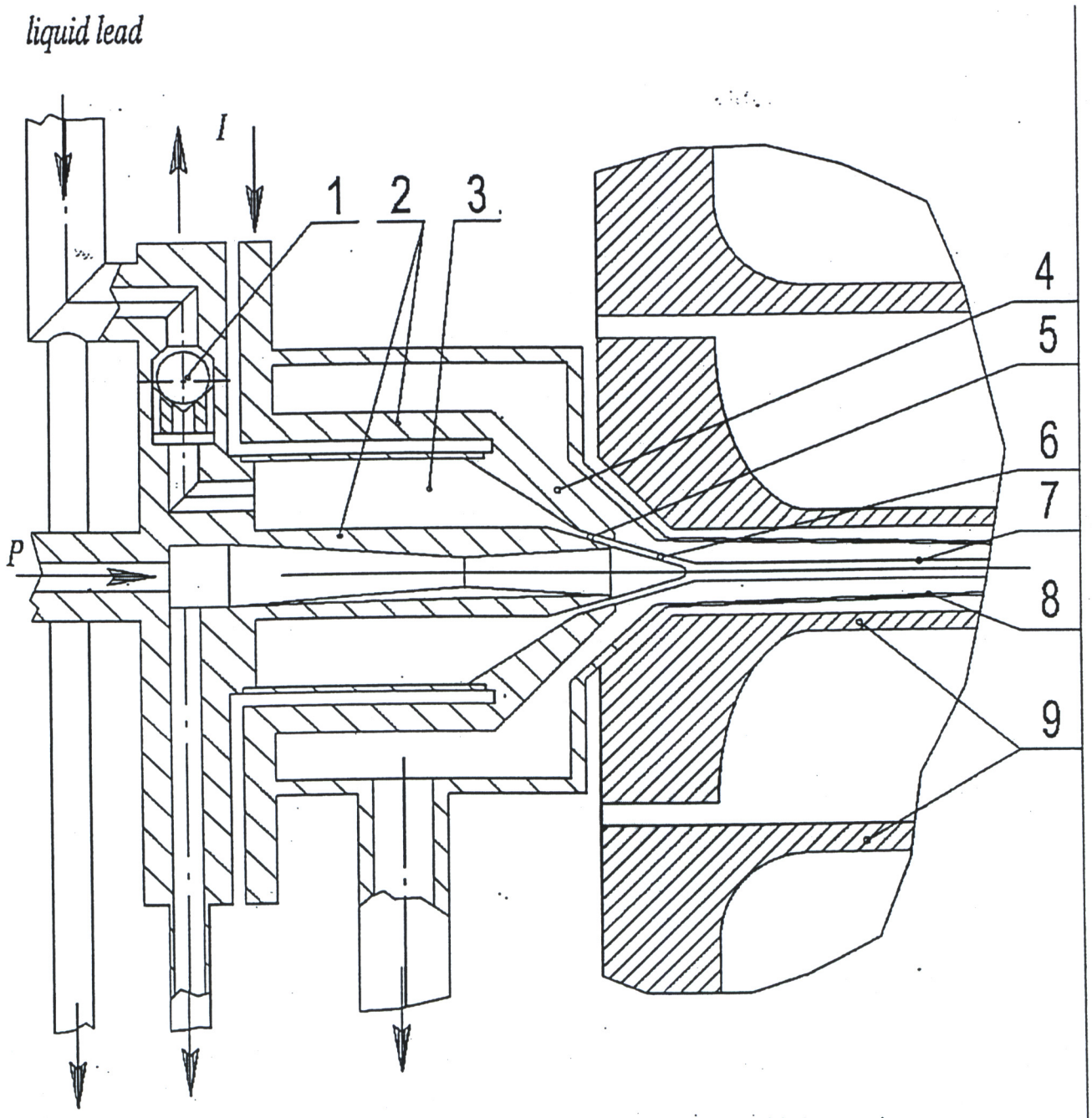

Fig.26 Pulse operation cylindrical liquid metal jet target

1-locking valve; 2-pulse magnetic system; 3-liquid metal accumulating chamber; 4-hot vacuum chamber; 5-conic nozzle; 6-conic liquid metal jet; 7-cylindrical liquid metal jet; 8-protecting vacuum chamber; 9-pion collection system.

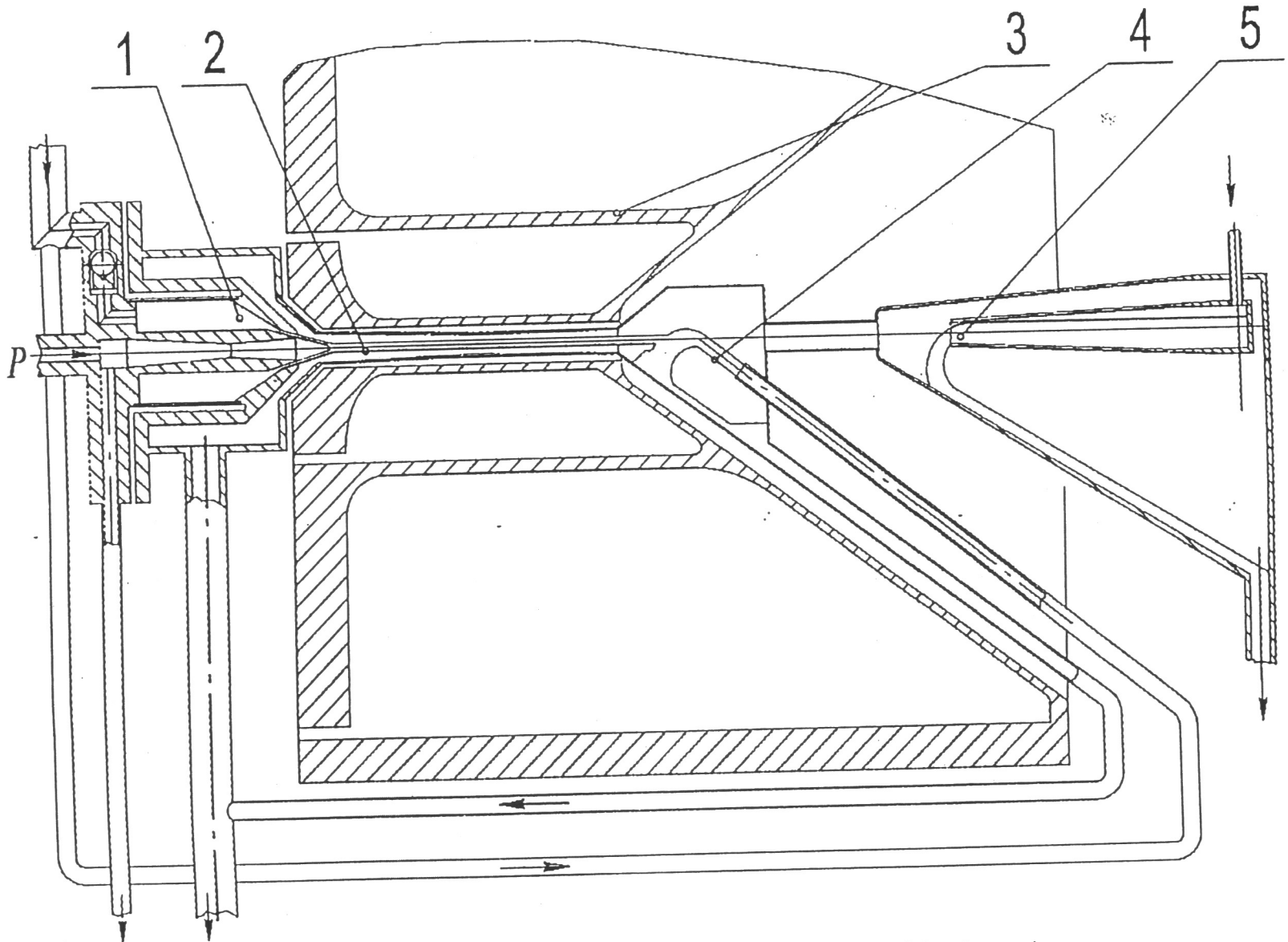

Fig.27 Pulse operation cylindrical liquid metal jet target

1-pulse operation target device; 2-cylindrical liquid metal jet; 3-pion collection system; 4-terminating jet; 5-liquid lead beam absorber.

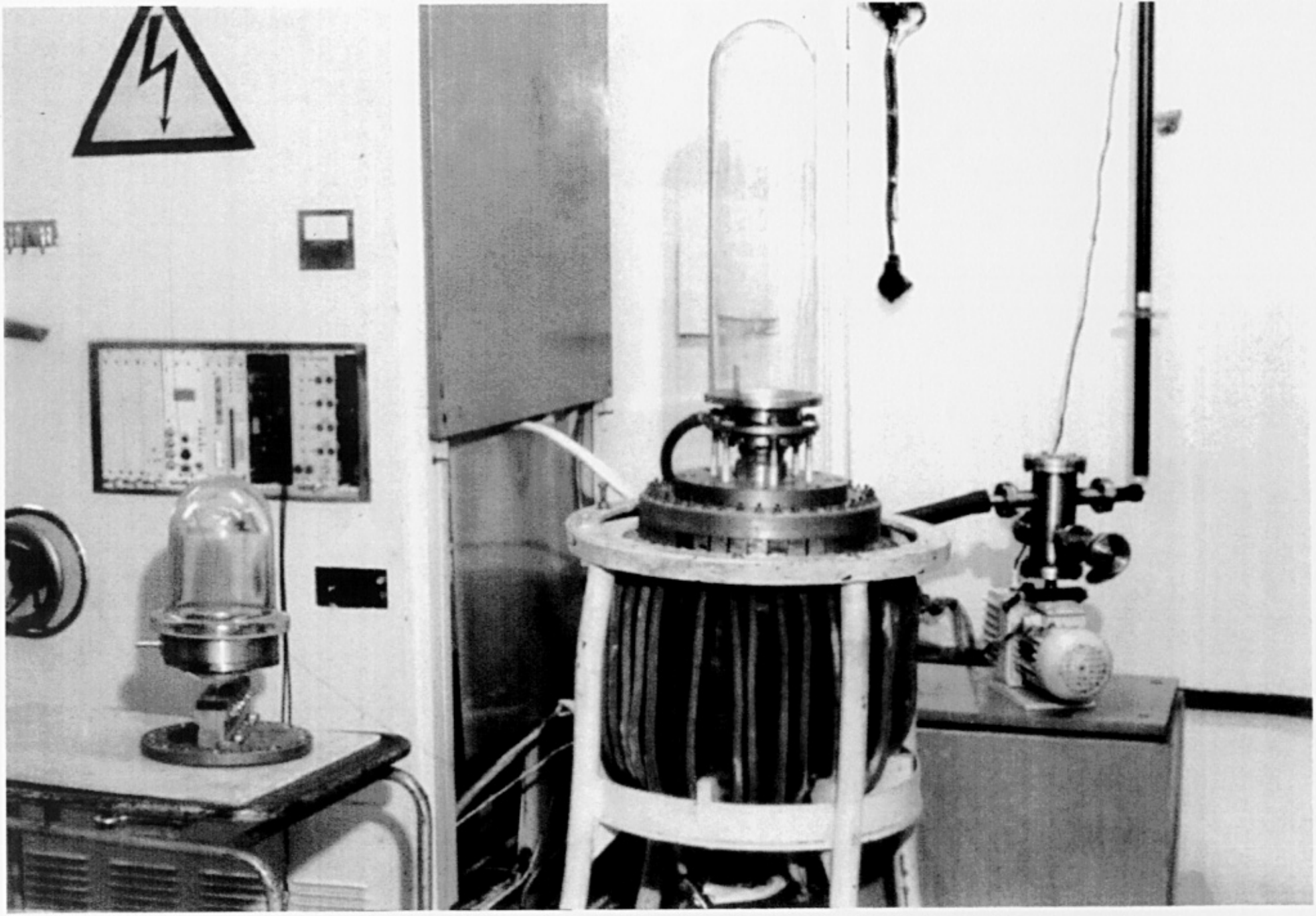

Photo of a stand for investigation of the liquid metal acceleration.

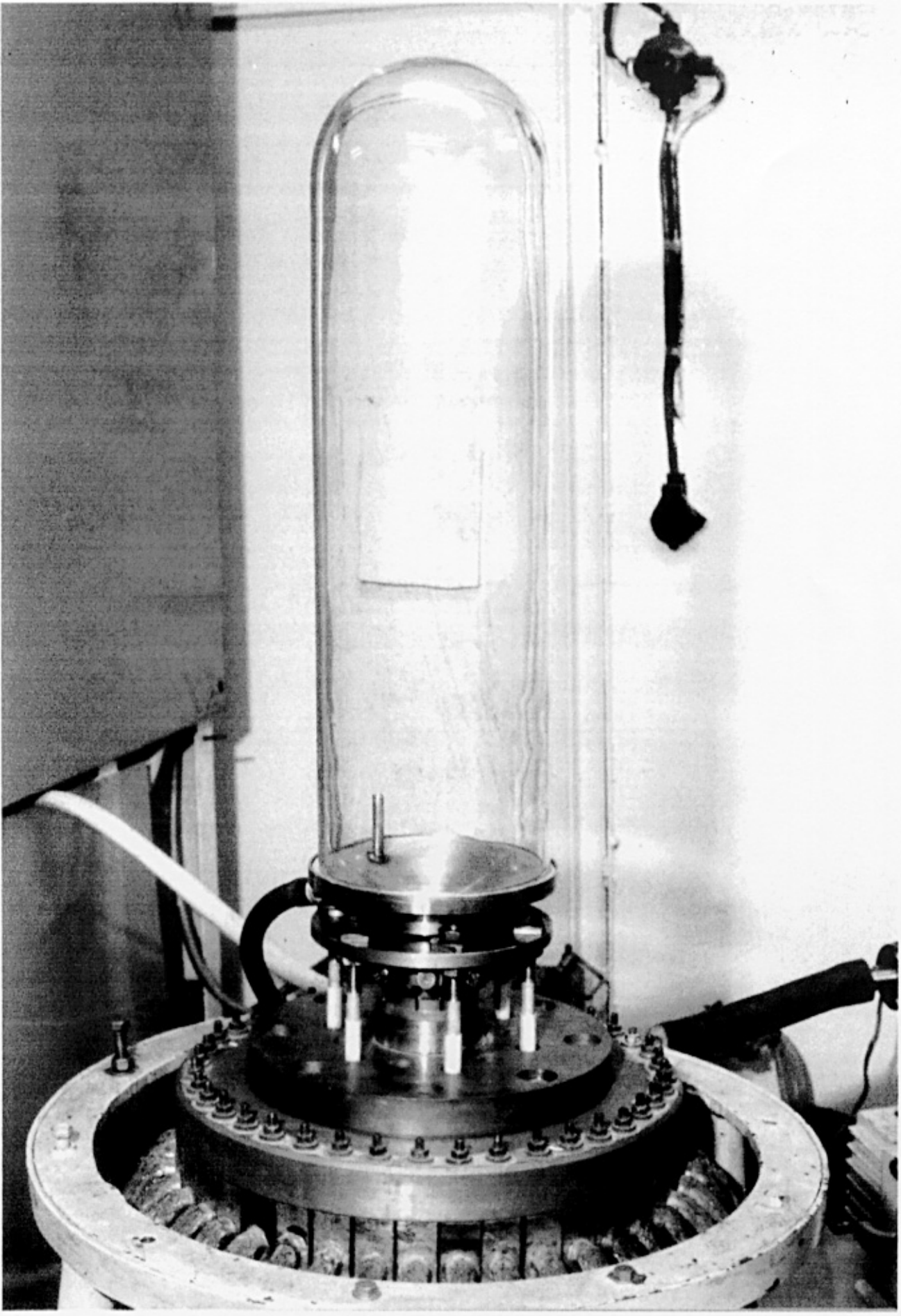

Photo of a device for investigation of a electromagnetic methods of liquid metal acceleration.

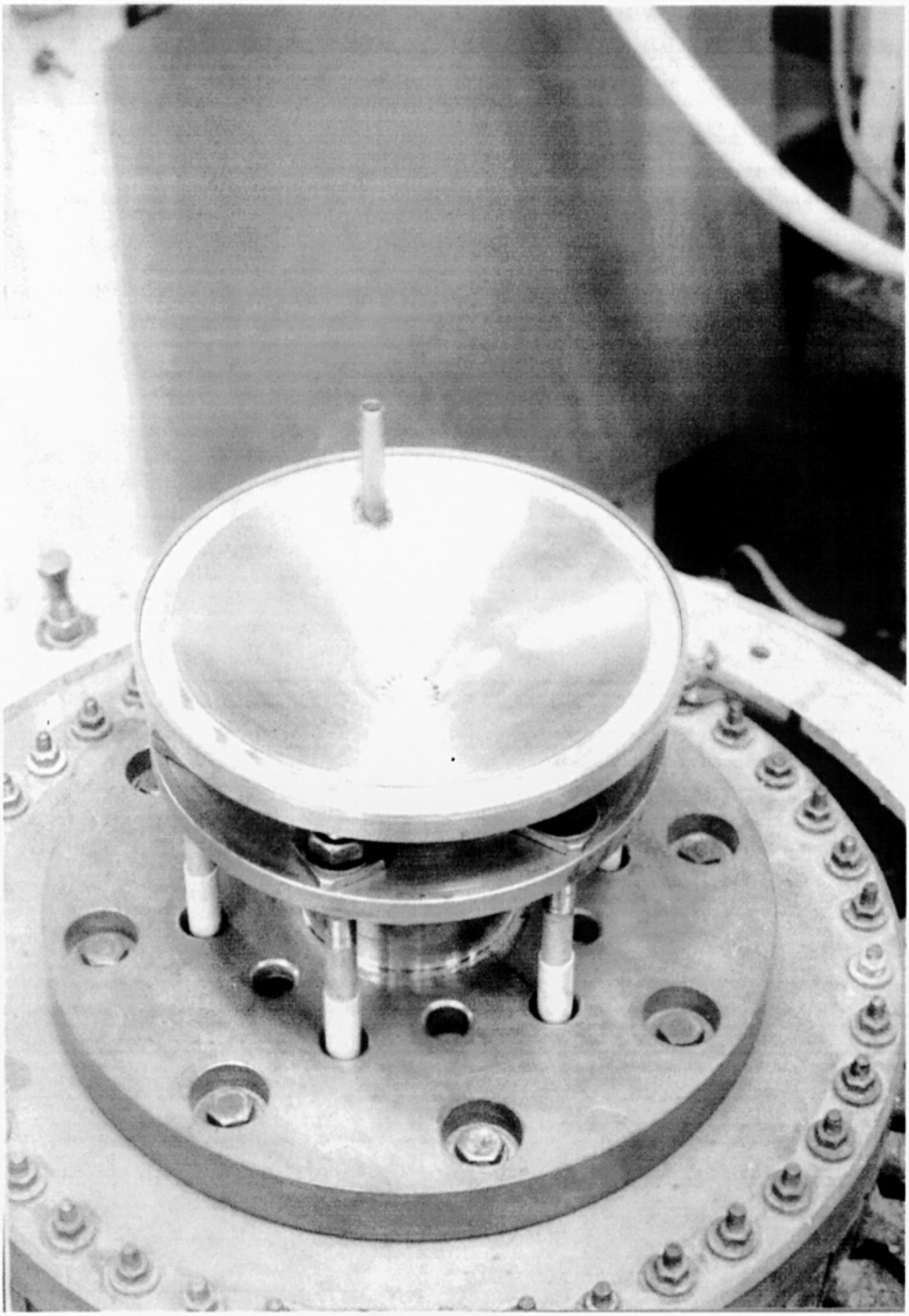

Top view of the device

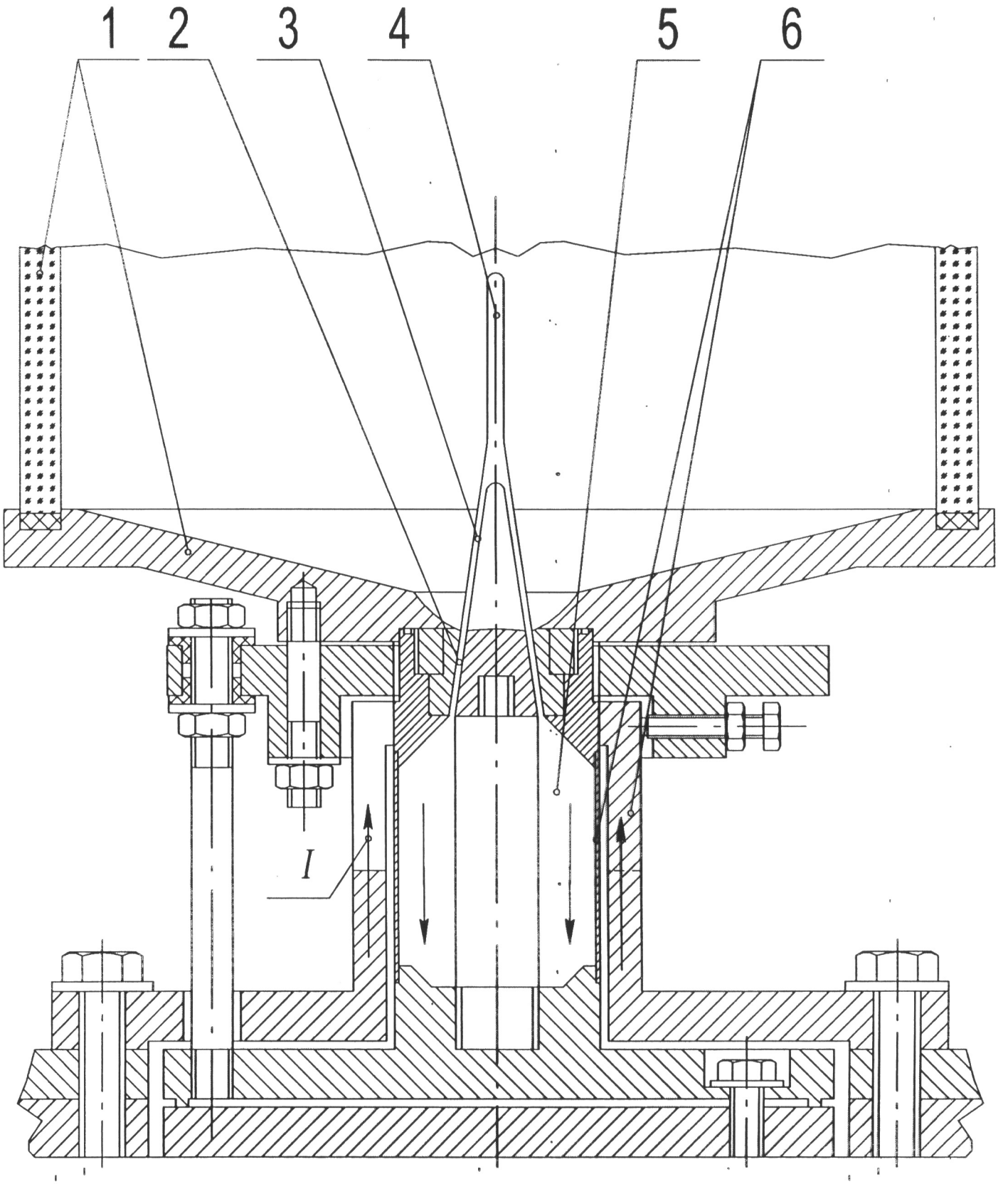

Pulse device for study of methods of liquid metal electromagnetic acceleration

1-vacuum chamber; 2-conic nozzle; 3-conic liquid metal jet; 4-cylindrical liquid metal jet; 5-liquid metal cylindrical accumulating chamber; 6-coaxial current input.

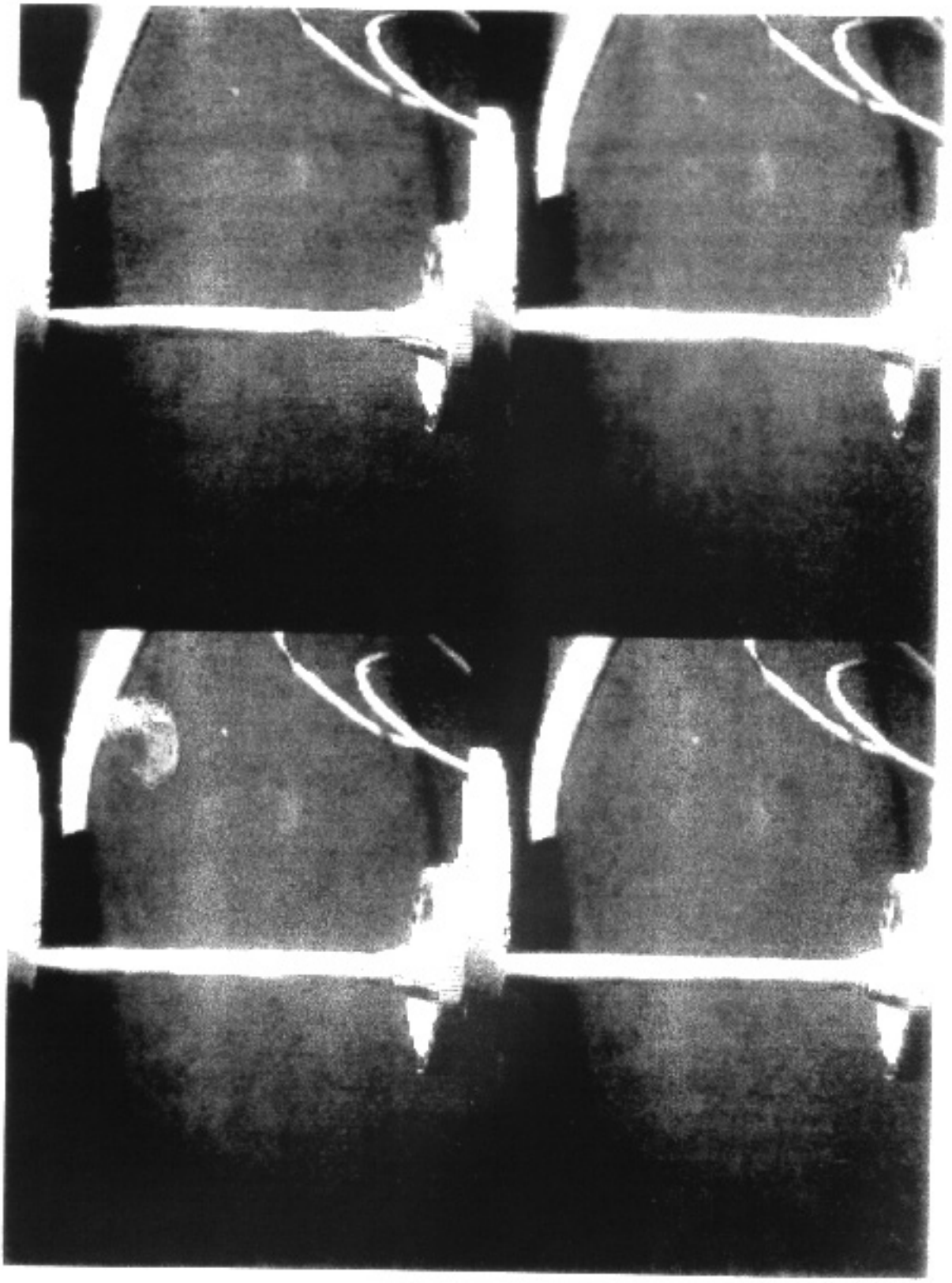

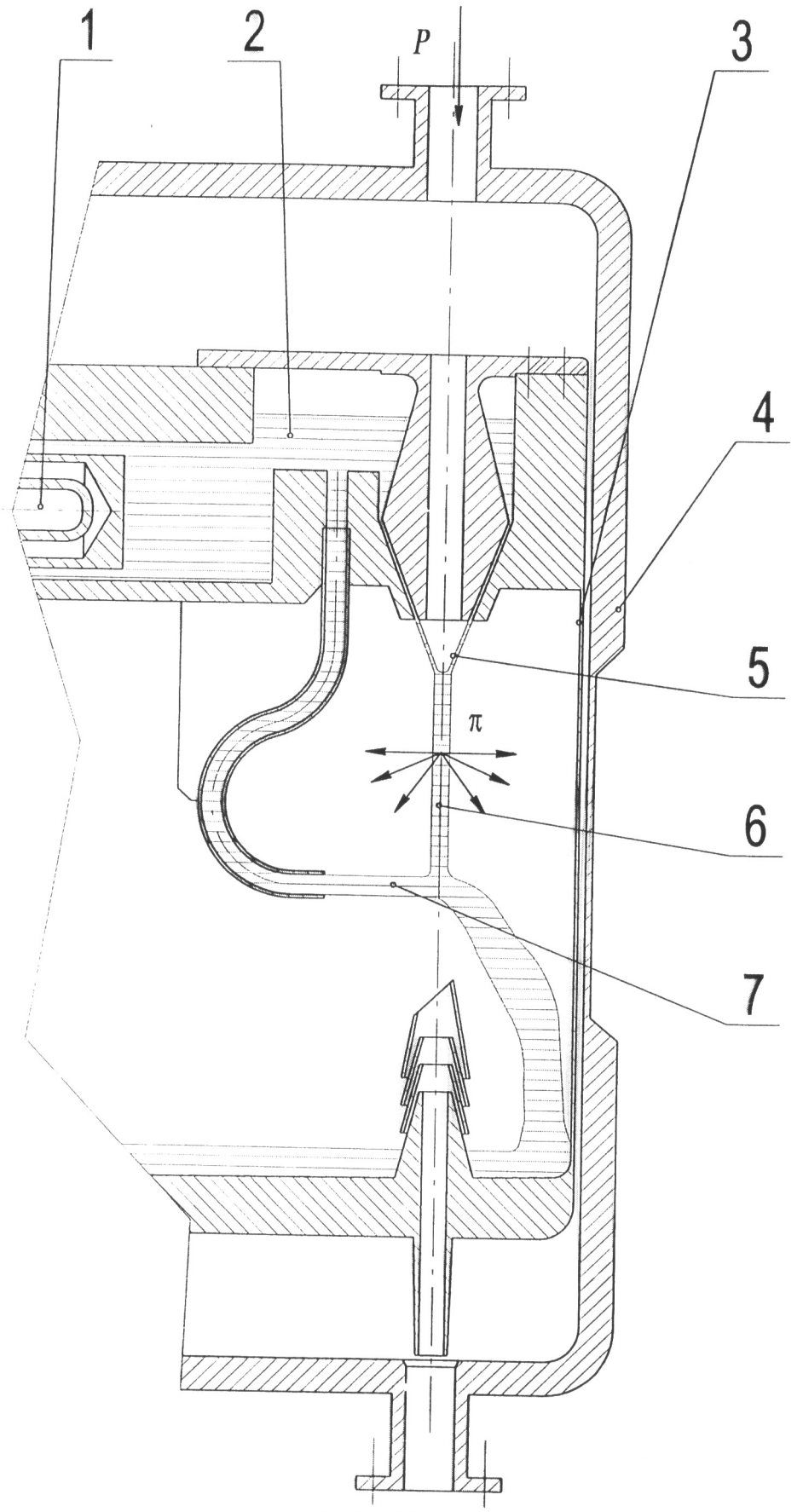

Cylindrical jet target

1-heat exchanger; 2-liquid metal; 3-hot vacuum chamber; 4-vacuum chamber; 5-conic liquid metal jet; 6-cylindrical liquid metal jet; 7-terminating jet.